# YEF200 SERIES 200W



(Pending)

YEF series are single-output slim type power supply and for wide range AC input from 90VAC to 264VAC. The series to the high efficiency up to 95%, and operates from -30℃ ~ 70℃ under air convection without fan.
The series serves as a high performance power supply, solution for various industrial applications.

## Features

- Universal AC Input/ Full Range
- Built-in active PFC function
- Protection:Short Circuit/Overload/ Over Voltage/Over Temperature
- Cooling by free air convection
- -30~+70℃ working temperature
- Three Years Warranty

## Model Information

| Yingjiao Part Number | DC Voltage | Rated Current | Rated Power | VOLTAGE ADJ.RANGE | Max.Capacitive Load |
|---|---|---|---|---|---|
| YEF200-5□ | 5V | 40A | 200W | 4.5~5.5V | 10000uF |
| YEF200-12□ | 12V | 16.7A | 200.4W | 11.4~12.6V | 8000uF |
| YEF200-15□ | 15V | 13.4A | 201W | 14.3~15.8V | 7000uF |
| YEF200-24□ | 24V | 8.4A | 201.6W | 22.8~25.2V | 5000uF |
| YEF200-36□ | 36V | 5.6A | 201.6W | 34.2~37.8V | 3000uF |
| YEF200-48□ | 48V | 4.2A | 201.6W | 45.6~50.4V | 2000uF |

## Model Encoding

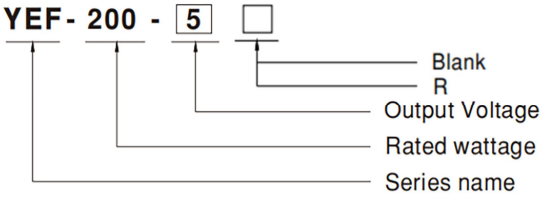


| Type | Description |
|---|---|
| Blank | Enclosed |
| R | Buit-in DC ok active signal and redundant function . |

## Input

| | | |
|---|---|---|
| VOLTAGE RANGE | 90~264VAC 127~370VDC | |
| FREQUENCY RANGE | 47~63Hz | |
| POWER FACTOR (Typ.) | PF≥0.94/230VAC, | |
| | PF≥0.98/115VAC at full load | |
| AVERAGE EFFICIENCY(Typ.) | 91.0% | YEF200-5 |
| | 93.0% | YEF200-12 |
| | 94.0% | YEF200-15 |
| | 94.0% | YEF200-24 |
| | 94.0% | YEF200-36 |
| | 94.0% | YEF200-48 |
| AC CURRENT(Typ.) | 2.2A/115VAC | |
| | 1.1A/230VAC | |
| INRUSH CURRENT(Typ.) | Cold Start 40A/115VAC | |
| | Cold Start 80A/230VAC | |
| LEAKAGE CURRENT | <0.75mA/240VAC | |

## Output

| | | |
|---|---|---|
| RIPPLE & NOSE(max.) | 200mVp-p | YEF200-5 |
| | 240mVp-p | YEF200-12 |
| | 240mVp-p | YEF200-15 |
| | 240mVp-p | YEF200-24 |
| | 240mVp-p | YEF200-36 |
| | 300mVp-p | YEF200-48 |
| VOLTAGE TOLERANCE | ±2.0% | YEF200-5 |
| | ±1.0% | YEF200-12 |
| | ±1.0% | YEF200-15 |
| | ±1.0% | YEF200-24 |
| | ±1.0% | YEF200-36 |
| | ±1.0% | YEF200-48 |
| LINE REGULATION | ±0.5% | |
| LOAD REGULATION | ±1.0% | YEF200-5 |
| | ±0.5% | YEF200-12 |
| | ±0.5% | YEF200-15 |
| | ±0.5% | YEF200-24 |
| | ±0.5% | YEF200-36 |
| | ±0.5% | YEF200-48 |
| SETUP,RISE TIME | 2000ms, 80ms/230VAC at full load | |
| | 3000ms, 80ms/115VAC at full load | |
| HOLD UP TIME (Typ.) | 10ms/230VAC at full load | |
| | 10ms/115VAC at full load | |

## Protection

| | |
|---|---|
| SHORT CIRCUIT | Protection type: Hiccup mode, recovers automatically |
| | after fault condition is removed |
| OVER LOAD | 110%-140% Rated Output Power |
| | Protection type: Hiccup mode, recovers automatically |
| | after fault condition is removed |
| OVER VOLTAGE | 5V:5.75~6.75V |
| | 12V:13.2~15.6V |
| | 15V:16.5V~19.5V |
| | 24V:26.4~31.2V |
| | 36V:39.6~46.8V |
| | 48V:52.8~62.4V |
| | Protection type :Shut down O/P voltage,re-power on to recover |
| OVER TEMPERATURE | Protection type :Shut down O/P voltage, |
| | recovers automatically after temperature goes down |

## FUNCTION

| | |
|---|---|
| DC OK SIGNAL(Optional) | Contact rating(max.):15Vdc/10mA resistive load |
| REDUNDANT(Optional) | For parallel connection protection:For parallel applications, when one PSU can not work, the another one will be automatically enabled. This can prevent the system crash, and provide the reliability of system. |

## Environment

| | |
|---|---|
| WORKING TEMP. | -30 ℃ to +70 ℃ (Refer to "Derating Curve") |
| Working Humidity | 20 ~ 95% RH Non-Condensing |
| STORAGE TEMP, HUMIDITY | -40℃ ~+85℃,10 ~ 95% RH non-condensing |
| TEMP. COEFFICIENT | ± 0.03%/℃(0~50℃) |
| VIBRATION | 10~ 500Hz, 5G 10min./1cycle, 60min. each along X, Y,Z axes |
| MTBF | 2472.1K hrs min. Telcordia SR-332 (Bellcore); |
| OVER VOLTAGE CATEGORY | Ⅲ;According to EN62368-1,altitude up to 2000 meters |
| SAFETY PROTECTION | CLASS Ⅰ |

## SAFETY & EMC

| | |
|---|---|
| SAFETY STANDARDS | BS EN/EN62368-1, BS EN/EN60335-1,EN/EN61558-1,BS EN/EN61558-2-16 |
| WITHSTAND VOLTAGE | I/P-O/P:3.75KVAC I/P-FG:2KVAC O/P-FG:1.25KVAC |
| ISOLATION RESISTANCE | I/P-O/P, I/P-FG, O/P-FG:100M Ohms/ 500VDC/25 ℃/70% RH |
| EMC EMISSION | Compliance to BS EN/EN55032 (CISPR32) Class B, BS EN/EN61000-3-2,-3, |
| EMC IMMUNITY | Compliance to BS EN/EN61000-4-2,3,4,5,6,8,11,BS EN/EN55035 |

## Note

1.All parameters NOT specially mentioned are measured at 230VAC input, rated load and 25℃ of ambient temperature.

2. Ripple & noise are measured at 20MHz of bandwidth by using a 12" twisted pair-wire terminated with a 0.1uf & 47uf parallel capacitor.

3. Tolerance :includes set up tolerance, line regulation and load regulation.

4. Derating may be needed under low input voltages. Please check the derating curve for more details.

5. The ambient temperature derating of 3.5℃/1000m is needed for operating altitude greater than 2000m(6500ft)

6.The power supply is considered a component which will be installed into a final equipment. The final equipment must be re-confirmed that it still meets EMC directives.

7. R type efficiency slightly less than the Blank type, according to the actual measurement.

8. Inrush current parameter has 10% tolerance.

## Dimensions & Weight

| | |
|---|---|
| Length: | 194mm/7.63in |
| Width: | 55mm/2.16in |
| Height: | 26mm/1.02in |
| Weight: | 500g |

### Packing

| | |
|---|---|
| Carton Size: | 31 × 28.5 x 23.5 CM |
| | 12.2 x 11.22 x9.25 in |
| Master Carton Quantities: | 20pcs/Carton |

## Dimensions and Installation

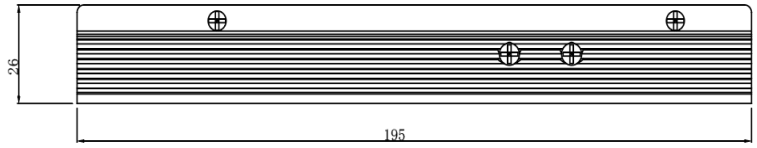


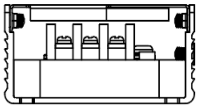

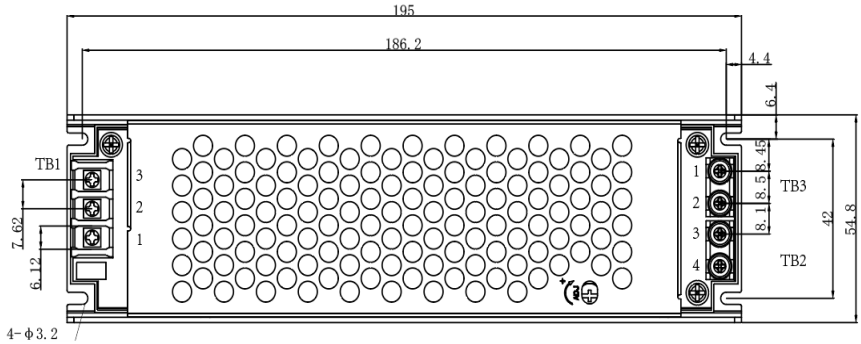


AC Input Terminal(TB1) pin NO. Assignment

| Pin No. | Assignment |
|---|---|
| 1 | AC/L |
| 2 | AC/N |
| 3 | ⏚ |

DC Output Terminal(TB2,TB3) pin NO. Assignment

| Pin No. | Assignment |
|---|---|
| 1,2 | -V |
| 3,4 | +V |

## Block Diagram

PFC fosc:100KHz
PWM fosc:90KHz~110KHz

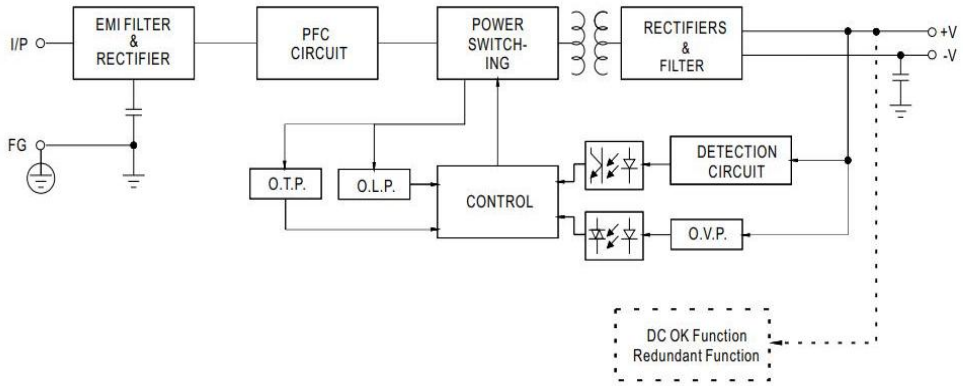


## Deduction curve and temperature

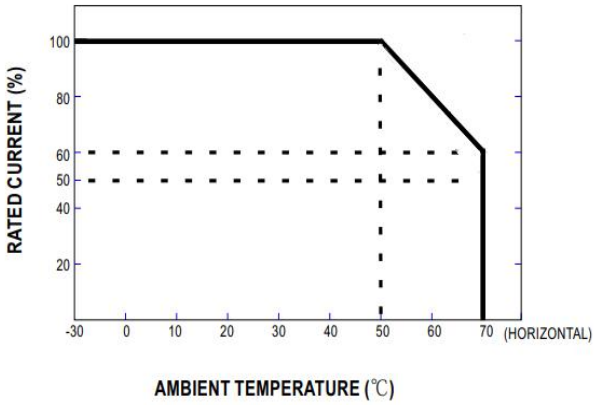


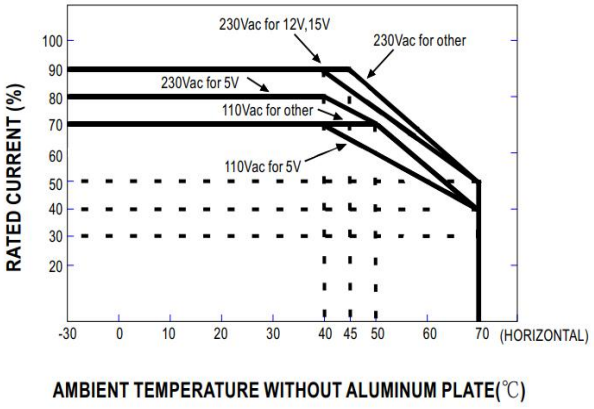


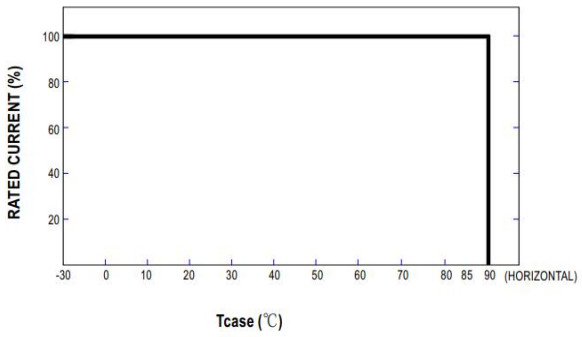

## Minus output and input voltage curves

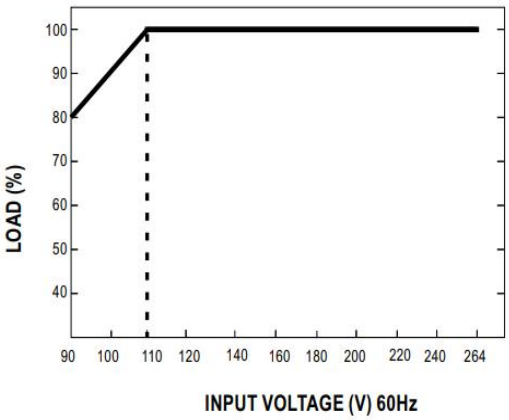


## DC OK Relay Contact

| | | |
|---|---|---|
| Optocoupler C-E Pin Conduction | PSU turns on | DC ok |
| Optocoupler C-E Pin Open | PSU turns off | DC fail |
| Optocoupler Rating(max.) | 15Vdc/10mA resistive load | |

## Redundant function

(1)YEF Series is built-in redundant function and can be connected 2 units in parallel .

(2) When in parallel operation the maximum load should not be greater than the rated power of any PSU.

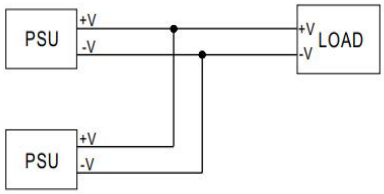

## Installation Diagram

1.Operate with additional aluminum plate

In order to meet the"Derating Curve"and the "Static Characteristics",YEF series must be installed onto an aluminum plate(or the cabinet of the same size) on the bottom.The size of the suggested aluminum plate is shown as below. And for optimizing thermal performance,the aluminum plate must have an even and smooth surface (or coated with thermal grease), and YEF series must be firmly mounted at the center of the aluminum plate.

2. It is suggested to install the product with M3 combination screws, and the product must be firmly installed at the center of the aluminum plate.

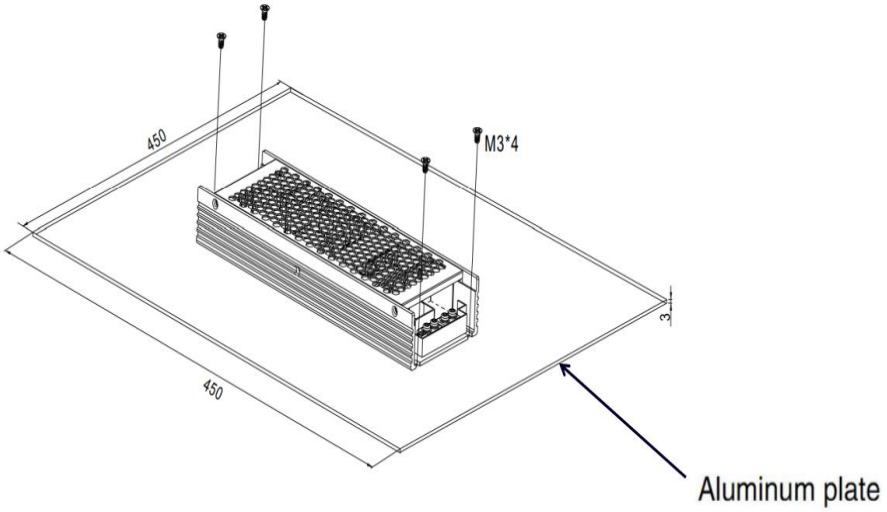


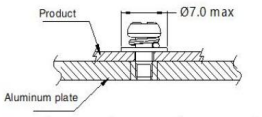


| Position | Screw Spec. | Torque(max) |
|---|---|---|
| ① – ④ | M3 | 0.4N • m |